1972

SPARE PARTS CATALOGUE

BATAVUS' BICYCLE GUIDE

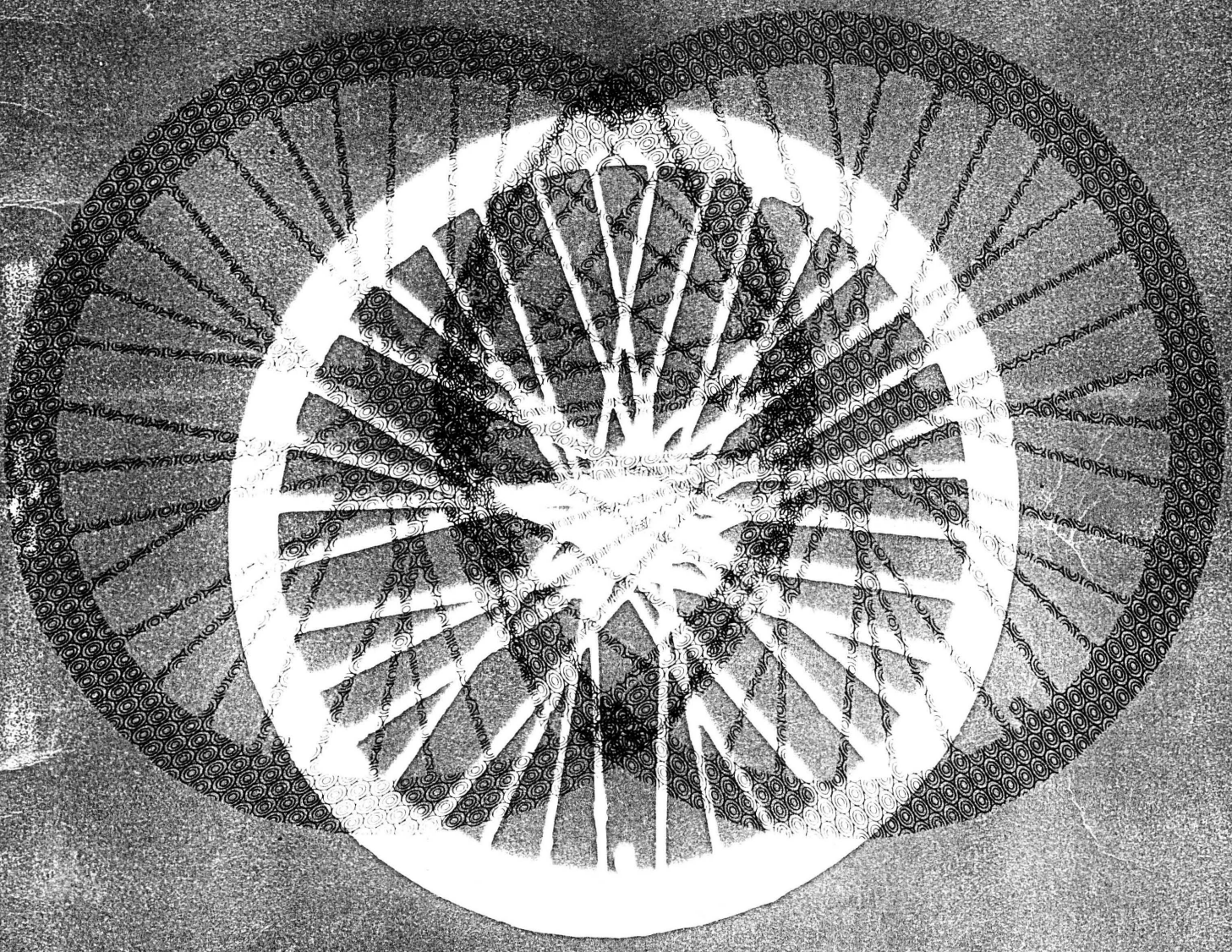

BATAVUS intercycle **b.v.**

HEERENVEEN HOLLAND

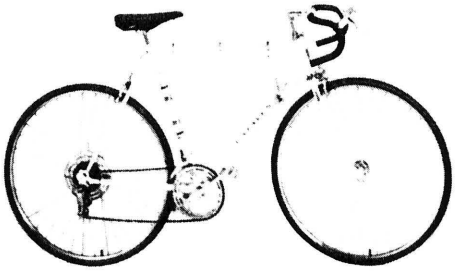

CHAMPION

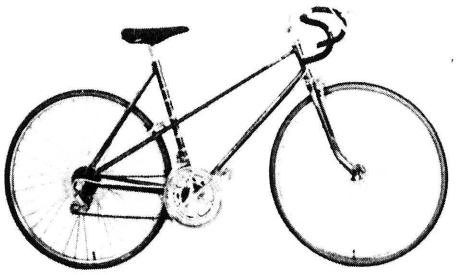

MIXTE RACER

MIXTE TOURIST

MONTE CARLO

TOUR DE L'EUROPE

VOYAGEUR (ladies')

VOYAGEUR (gent's)

Please note:

When ordering spare parts always state part-number, description and color.

Some parts which have been individually pictured in this catalogue only can be supplied when the main item of which they from part of is ordered. These main parts are marked with*.

Interim alterations in this catalogue are fully reserved.

Copyright: Reproduction of this catalogue, completely or partly, without prior authorisation of the editor, is prohibited.

Index

Frames	4
Crank axles, cranks	5
Front forks, wheels	6–7
Front hubs	8–9
Rear hubs	10–11
3-Speed hub (Sturmey Archer)	12
3-Speed hub (Shimano)	13
Chainwheels, chains, mudguards	14–15
Derailleur Huret front	16–17
Derailleur Huret rear	18–19
Derailleur Shimano front	20–21
Derailleur Shimano rear	22–23
Derailleur Simplex front	24–25
Derailleur Simplex rear	26–27
Handlebars	28–29
Brakes	30–31
Cable clips	32
Seat, toolkit, headplate, kickstand	33
Decals	34

FRAMES

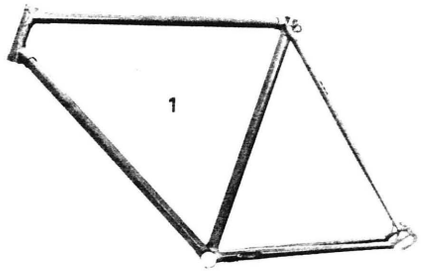

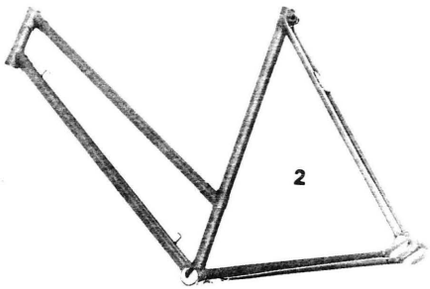

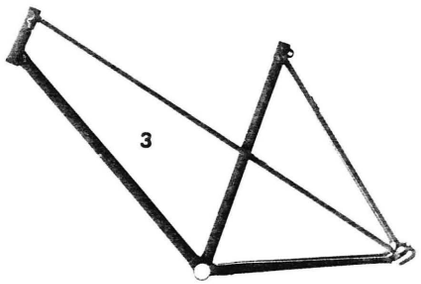

Pos	Part-No.	Description	CHAMPION 20"	MONTE CARLO 22.5"	MONTE CARLO 24"	MONTE CARLO 25.5"	TOUR DE L'EUROPE 22.5"	TOUR DE L'EUROPE 24"	TOUR DE L'EUROPE 25.5"	MIXTE TOURIST 21"	VOYAGEUR ladies' 22.5"	MIXTE RACER 21"	VOYAGEUR gent's 22.5"
1	* 57-020	frame, gent's, 20"		x									
1	* 57-012	frame, gent's, 22.5"	x	x	x		x						x
1	* 57-011	frame, gent's, 24"		x	x		x						
1	* 57-010	frame, gent's, 25.5"		x	x		x						
2	* 57-013	frame, ladies', 22.5"									x		
3	* 57-014	frame, Mixte, 21"								x		x	

CRANK AXLES, CRANKS

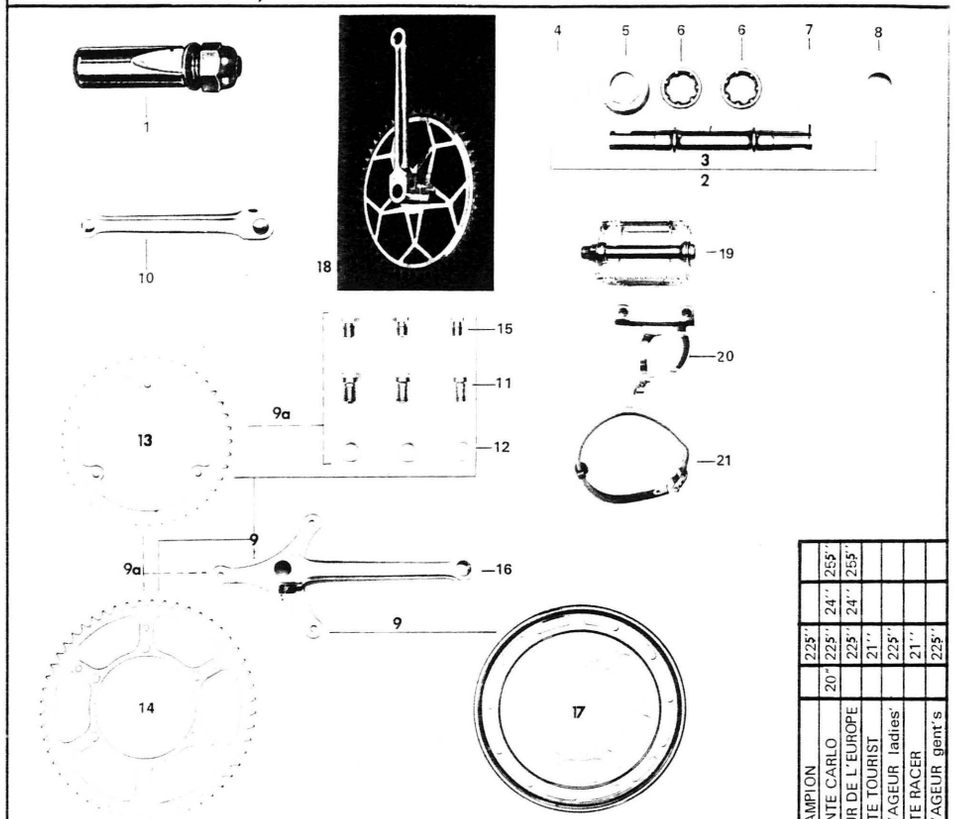

Pos	Part-No.	Description	CHAMPION 20"	CHAMPION 22.5"	MONTE CARLO 22.5"	MONTE CARLO 24"	MONTE CARLO 25.5"	TOUR DE L'EUROPE 22.5"	TOUR DE L'EUROPE 24"	TOUR DE L'EUROPE 25.5"	MIXTE TOURIST 21"	VOYAGEUR ladies' 22.5"	MIXTE RACER 21"	VOYAGEUR gent's 22.5"
1	*08-001	cotter pin with nut and washer	x	x	x	x	x	x	x	x	x	x	x	x
2	*24-100	crank axle, assy	x	x	x	x	x	x	x	x	x	x	x	x
3	24-100-01	crank axle	x	x	x	x	x	x	x	x	x	x	x	x
4	24-100-02	lockring	x	x	x	x	x	x	x	x	x	x	x	x
5	24-100-03	race (L)	x	x	x	x	x	x	x	x	x	x	x	x
6	47-095	bearing	x	x	x	x	x	x	x	x	x	x	x	x
7	24-068	lockring	x	x	x	x	x	x	x	x	x	x	x	x
8	24-100-04	race (R)	x	x	x	x	x	x	x	x	x	x	x	x
9	*44-434	crank, assy with chainwheel T=40-52 and protector			x	x	x					x		
9a	*44-474	crank, assy with chainwheel T=40-52 without protector		x										
10	*44-434-01	crank arm (L)		x	x	x	x	x				x		
11	44-434-02	bolt		x	x	x	x	x				x		
12	44-434-03	washer		x	x	x	x	x				x		
13	44-434-04	chainwheel (T=40)		x	x	x	x	x				x		
14	44-434-05	chainwheel (T=52)		x	x	x	x	x				x		
15	44-434-06	bolt		x	x	x	x	x				x		
16	44-434-07	crank arm (R)		x	x	x	x	x				x		
17	*49-052	chainwheel protector			x	x	x	x				x		
18	*44-152	crank, assy with chainwheel (T=46)									x			x
19	*44-453	reflector pedals, per pair	x			x	x	x			x			x
20	*44-454	toe clips, per pair				x								
21	*46-331	straps, per pair				x								

FRONT FORKS, WHEELS

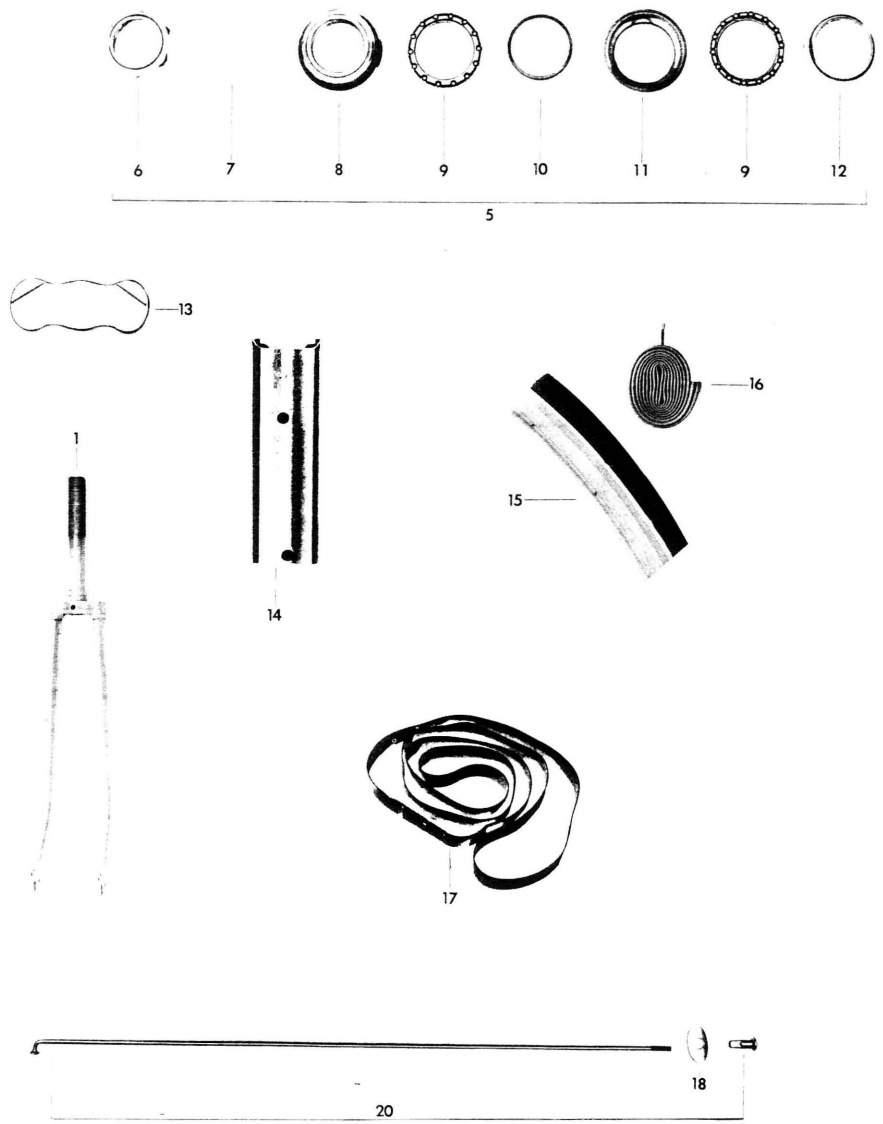

Pos	Part-No.	Description	CHAMPION 22.5"	MONTE CARLO 22.5"	TOUR DE L'EUROPE 22.5"	MIXTE TOURIST 21"	VOYAGEUR ladies' 22.5"	MIXTE RACER 21"	VOYAGEUR gent's 22.5"
				24"	24"				
				25.5"	25.5"				
1	*12-255	frontfork (22.5"frame)	x			x	x	x	x
1	*12-255-01	frontfork (22.5"frame) with chromed fork ends		x	x				
1	*12-281-01	frontfork (24" frame) with chromed fork ends		x	x				
1	*12-282-01	frontfork (25.5" frame) with chromed fork ends		x	x				
1	*12-292-01	frontfork (20" frame) with chromed fork ends		x					
5	*47-099	headset, assy	x	x	x	x	x	x	x
6	47-099-01	big locknut	x	x	x	x	x	x	x
7	47-099-02	washer	x	x	x	x	x	x	x
8	47-099-03	top threaded race	x	x	x	x	x	x	x
9	47-099-04	bearing, class IV, din. 1504	x	x	x	x	x	x	x
10	47-099-05	top set race	x	x	x	x	x	x	x
11	47-099-06	bottom set race	x	x	x	x	x	x	x
12	47-099-07	crown race	x	x	x	x	x	x	x
13	47-088	crown cap	x	x	x	x	x	x	x
14	*40-175	rim, chromed, U24, 27 x 1¼"	x	x	x	x	x	x	x
15	*48-135	tire Vredestein, 27 x 1¼"	x	x		x	x	x	x
15	*48-142	tire Hutchinson, 27 x 1¼'			x				
16	*48-136	tube Vredestein, Schraedervalve, 27 x 1¼"	x	x		x	x	x	x
16	*48-143	tube Hutchinson, Schraedervalve, 27 x 1¼"			x				
17	48-116	rim ribbon, 27 x 1¼"	x	x		x	x	x	x
18	*40-080	nipple washer, No. 14 (rear)	x	x	x	x	x	x	x
20	*40-183	spoke 14-295, rear (for hub No. 44-137) with nipple			x		x		x
20	*40-176	spoke 14-296, front (for hub No. 44-433, 44-455 and 44-432) with nipple	x	x	x	x	x	x	x
20	*40-039	spoke 14-297, rear (for hub No. 44-137) with nipple	x	x		x		x	

FRONT HUBS

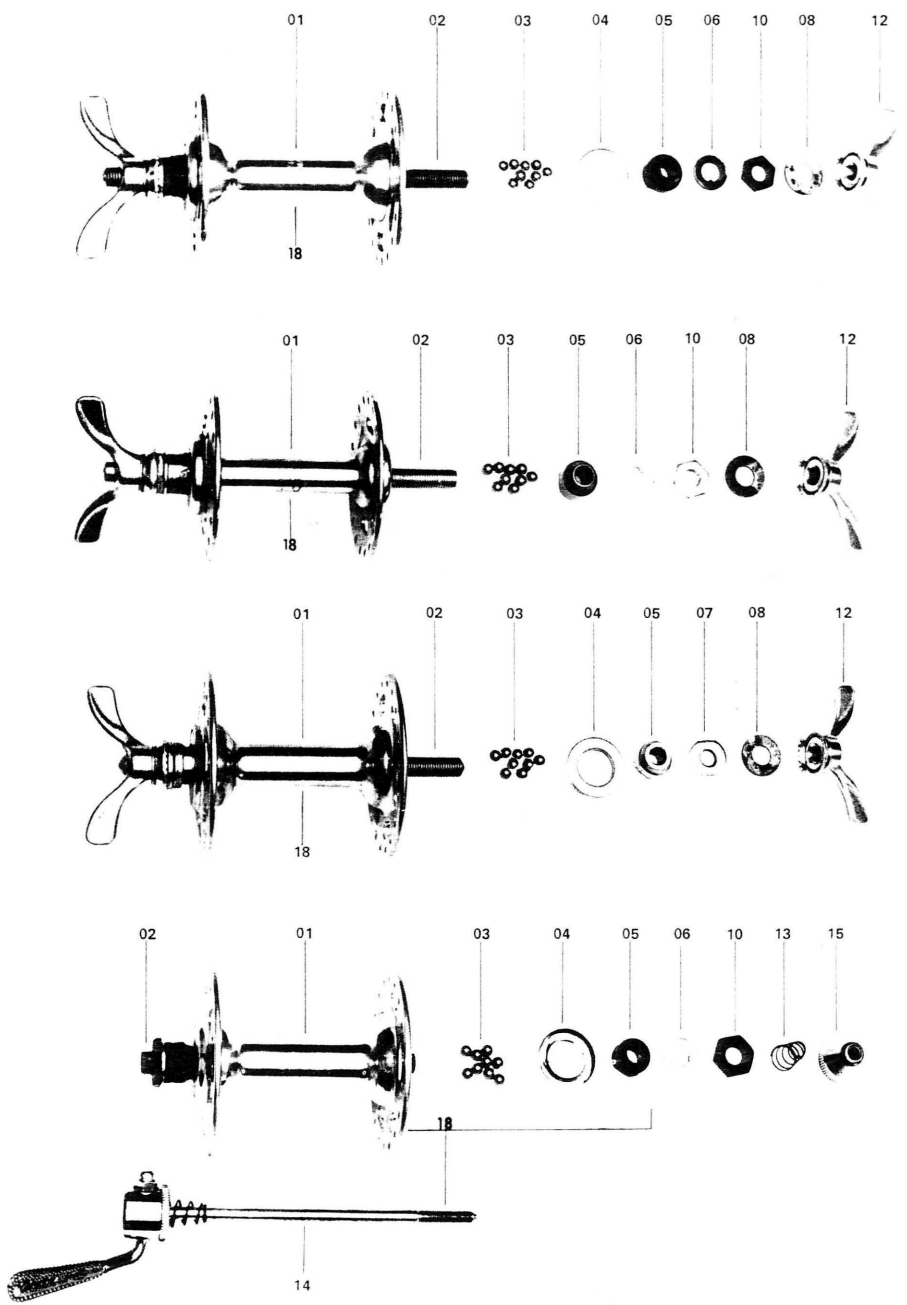

Pos	Part-No.	Description	CHAMPION 22,5"	MONTE CARLO 20"	TOUR DE L'EUROPE 22,5"	MIXTE TOURIST 21"	VOYAGEUR ladies' 22,5"	MIXTE RACER 21"	VOYAGEUR gent's 22,5"	24"	25,5"
1	44-136-01	hub casing			x						
2	44-136-02	axle			x						
3	44-136-03	bearings, per set			x						
4	44-136-04	dust ring			x						
5	44-136-05	cone			x						
6	44-136-06	key washer			x						
8	06-048	lockring			x						
10	44-136-07	thin locknut			x						
12	*02-092	wing nut, No. 4963			x						
18	*44-136	front hub Maillard, assy without wingnuts			x						
	*57-012-03	front wheel, assy with hub Maillard, without tire,tube and wingnuts			x						
1	44-433-01	hub casing	x	x		x	x	x	x		
2	44-433-02	axle	x	x		x	x	x	x		
3	44-433-03	bearings, per set	x	x		x	x	x	x		
5	44-433-05	cone	x	x		x	x	x	x		
6	44-433-06	key washer	x	x		x	x	x	x		
8	06-048	lockring	x	x		x	x	x	x		
10	44-433-07	thin locknut	x	x		x	x	x	x		
12	*02-092	wing nut, No. 4963	x	x		x	x	x	x		
18	*44-433	front hub Weco, assy without wingnuts	x	x		x	x	x	x		
	*57-020-03	front wheel, assy with hub Weco, without tire,tube and wingnuts	x	x		x	x	x	x		
1	44-455-01	hub casing			x						
2	44-455-02	axle			x						
3	44-455-03	bearings, per set			x						
4	44-455-04	dust ring			x						
5	44-455-05	cone			x						
7	44-455-07	flatsided counter nut			x						
8	05-048	washer			x						
12	*02-092	wing nut, No. 4963			x						
18	*44-455	front hub Shimano, assy without wingnuts			x						
	*57-012-05	front wheel, assy with hub Shimano, without tire,tube and wingnuts			x						
1	44-458-01	hub casing			x						
2	44-458-02	axle			x						
3	44-458-03	bearings, per set			x						
4	44-458-04	dust cap			x						
5	44-458-05	cone			x						
6	44-458-06	key washer			x						
10	44-458-07	thin locknut			x						
13	44-458-10	volute spring			x						
14	44-458-11	cam lever, assy			x						
15	44-458-09	locknut			x						
18	*44-458	front hub (quick release) Shimano, assy			x						
	*57-012-07	front wheel, assy with hub Shimano (quick release), without tire and tube.			x						

REAR HUBS

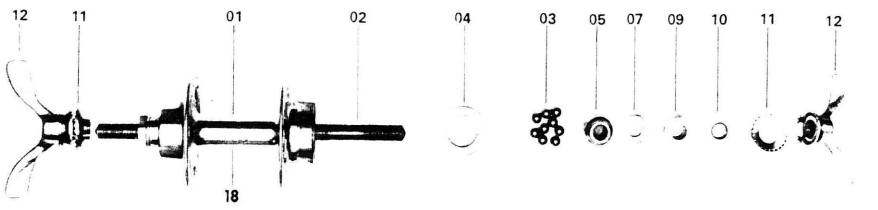

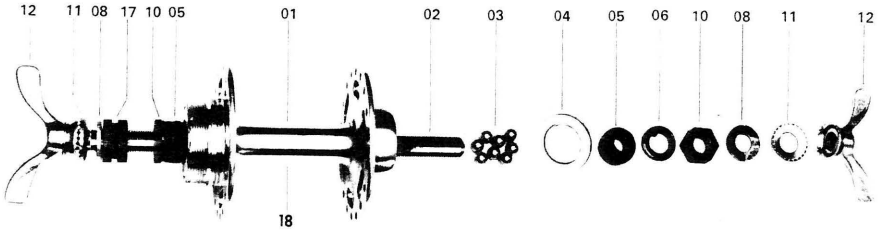

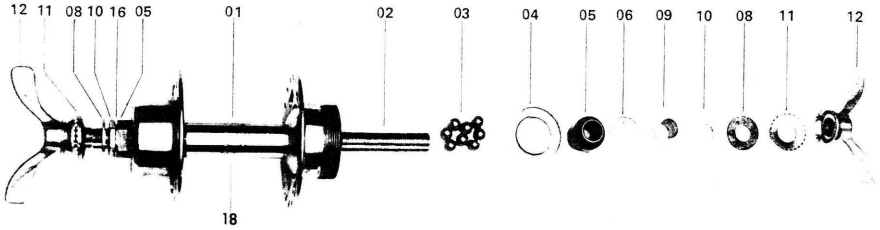

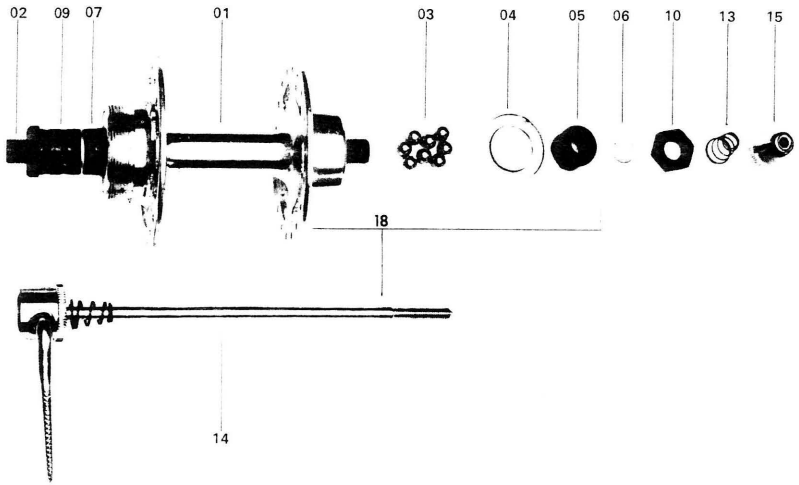

Pos	Part-No.	Description	CHAMPION 22,5"	MONTE CARLO 20"	TOUR DE L'EUROPE 22,5"	MIXTE TOURIST 22,5"	VOYAGEUR ladies' 21"	MIXTE RACER 22,5"	VOYAGEUR gent's 21"	22,5"
1	44-456-01	hub casing			x					
2	44-456-02	axle			x					
3	44-456-03	bearings, per set			x					
4	44-456-04	dust ring			x					
5	44-456-05	cone			x					
7	44-456-07	flatsided counter nut			x					
9	44-456-09	bushing			x					
10	44-456-10	thin locknut			x					
11	06-031	notched washer			x					
12	*02-093	wing nut No. 4964			x					
18	*44-456	rear hub, Shimano, assy without wingnuts			x					
	*57-012-06	rear wheel, assy with hub Shimano, without tire,tube and wingnuts			x					
1	44-137-01	hub casing			x					
2	44-137-02	axle			x					
3	44-137-03	bearings, per set			x					
4	44-137-04	dustring			x					
5	44-137-05	cone			x					
6	44-137-06	key washer			x					
8	44-137-08	washer			x					
10	44-137-10	thin locknut			x					
11	06-031	notched washer			x					
12	*02-093	wing nut No. 4964			x					
17	44-137-17	threaded bushing			x					
18	*44-137	rear hub Maillard, assy without wingnuts			x					
	*57-012-04	rear wheel, assy with hub Maillard, without tire,tube and wingnuts			x					
1	44-432-01	hub casing	x	x		x		x		
2	44-432-02	axle	x	x		x		x		
3	44-432-03	bearings per set	x	x		x		x		
4	44-432-04	dustring	x	x		x		x		
5	44-432-05	cone	x	x		x		x		
6	44-432-06	key washer	x	x		x		x		
8	44-432-08	washer	x	x		x		x		
9	44-432-09	bushring	x	x		x		x		
10	44-432-10	thin locknut	x	x		x		x		
11	06-031	notched washer	x	x		x		x		
12	*02-093	wing nut No. 4964	x	x		x		x		
16	44-432-16	thin washer	x	x		x		x		
18	*44-432	rear hub Weco, assy without wingnuts	x	x		x		x		
	*57-020-04	rear wheel, assy with hub Weco, without tire,tube and wingnuts	x	x		x		x		
1	44-457-01	hub casing			x					
2	44-457-02	axle			x					
3	44-457-03	bearings, per set			x					
4	44-457-04	dustring			x					
5	44-457-05	cone			x					
6	44-457-06	key washer			x					
7	44-457-07	flatside counternut			x					
9	44-457-09	bushing			x					
10	44-457-10	thin locknut			x					
13	44-457-13	volute spring			x					
14	*44-457-14	cam lever assy			x					
15	44-457-15	coniccal spring nut			x					
18	*44-457	rear hub (quick release) Shimano, assy			x					
	*57-012-08	rear wheel, assy with hub Shimano (quick release), without tire and tube.			x					

3 SPEED HUB, STURMEY ARCHER

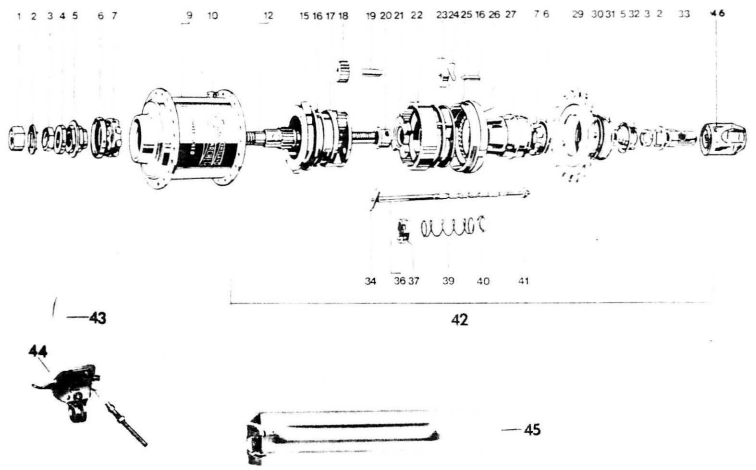

Pos	Part-No.	Description	CHAMPION	MONTE CARLO	TOUR DE L'EUROPE	MIXTE TOURIST	VOYAGEUR ladies'	MIXTE RACER	VOYAGEUR gent's
				20"		225"	225"	21"	225"
					225"	225"	24"	24"	24"
					255"	255"			
1	44-171-01	L.H. axle nut					x		x
2	44-171-02	axle lock washer					x		x
3	44-171-03	lock nut					x		x
4	44-171-04	axle washer 1/8" thick (3.2 mm)					x		x
5	44-171-05	cone with dust cap					x		x
6	44-171-06	outer dust cap					x		x
7	44-171-07	ball cage (with ball bearing)					x		x
9	55-171-09	shell 36 holes and 13 all cup combined					x		x
10	44-171-10	lubricator					x		x
12	44-171-12	axle 6¼" (159 mm)					x		x
15	44-171-15	low gear pawl					x		x
16	44-171-16	pawl pin					x		x
17	44-171-17	planet cage					x		x
18	44-171-18	planet pinion					x		x
19	44-171-19	pinion pin					x		x
20	44-171-20	clutch sleeve					x		x
21	44-171-21	clutch					x		x
22	44-171-22	gear ring					x		x
23	44-171-23	gear ring pawl					x		x
24	44-171-24	pawl spring					x		x
25	44-171-25	R.H. ball ring					x		x
26	44-171-26	inner dust cap					x		x
27	44-171-27	driver					x		x
29	*44-171-29	sprocket 20 T					x		x
30	44-171-30	sprocket spacing washer					x		x
31	44-171-31	sprocket circlip					x		x
32	44-171-32	cone lockwasher					x		x
33	44-171-33	R.H. axle nut					x		x
34	44-171-34	axle key					x		x
36	44-171-36	indicator coupling axle 6¼" (159 mm)					x		x
37	44-171-37	thrust ring					x		x
39	44-171-39	clutch spring					x		x
40	44-171-40	clutch spring cap					x		x
41	44-171-41	indicator coupling connection locknut					x		x
42	*44-171-	3 speed Hub Sturmey Archer typ AW assy					x		x
43	*41-102	cable assy					x		x
44	*49-047	trigger control					x		x
45	10-150	case anchor plate					x		x
46	46-154	axle cap protector 3610290					x		x
	*57-012-09	rear wheel, with hub Sturmey Archer 3 speed without tire and tube					x		x

3 SPEED HUB SHIMANO

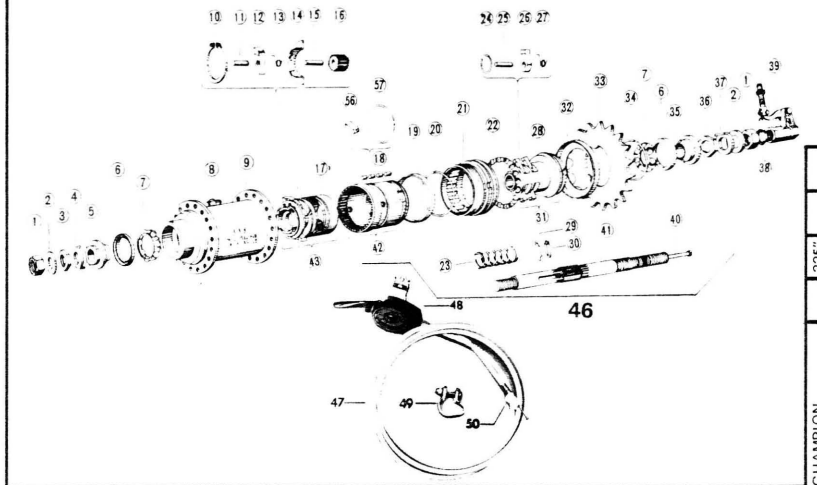

Pos	Part-No.	Description	CHAMPION	MONTE CARLO	TOUR DE L'EUROPE	MIXTE TOURIST	VOYAGEUR ladies'	MIXTE RACER	VOYAGEUR gent's
				20"		225"	225"	21"	225"
					225"	225"	24"	24"	24"
					255"	255"			
1	44-463-01	Nut					x		x
2	44-463-02	Washer					x		x
3	44-463-03	Lock Nut A (3/8 x 3)					x		x
4	44-463-04	Cone Stay Washer					x		x
5	44-463-05	L.H. Cone w/Dust Cap B					x		x
6	44-463-06	Dust Cap A					x		x
7	44-463-07	Ball Retainer A					x		x
8	44-463-08	Lubricator					x		x
9	44-463-09	Hub Shell w/left Cup 36H					x		x
10	44-463-10	Snap Ring A					x		x
11	44-463-11	Pawl Pin C					x		x
12	44-463-12	Pawl C					x		x
13	44-463-13	Pawl Spring C					x		x
14	44-463-14	Pawl Plate					x		x
15	44-463-15	Pinion Pin B					x		x
16	44-463-16	Planet Pinion					x		x
17	44-463-17	Ratchet B-1					x		x
18	44-463-18	Roller					x		x
19	44-463-19	Roller Cover					x		x
20	44-463-20	Snap Ring D					x		x
21	44-463-21	Ball Cup					x		x
22	44-463-22	Ball Retainer B					x		x
23	44-463-23	Spring					x		x
24	44-463-24	Snap Ring B					x		x
25	44-463-25	Pawl Pin B					x		x
26	44-463-26	Pawl B					x		x
27	44-463-27	Pawl Spring B					x		x
28	44-463-28	Driver					x		x
29	44-463-29	Sliding Key B					x		x
30	44-463-30	Sliding Key A					x		x
31	44-463-31	Complete Driver					x		x
32	44-463-32	Dust Cap					x		x
33	*44-463-33	Sprocket Wheel 20T					x		x
34	44-463-34	Snap Ring C					x		x
35	44-463-35	R.H. Cone w/Dust Cap B					x		x
36	44-463-36	Lock Nut B 7/16 x 3					x		x
37	44-463-37	Non-Turn Washer					x		x
38	44-463-38	Bell Crank Lock Nut					x		x
39	44-463-39	Complete Bell Crank					x		x
40	44-463-40	Push Rod					x		x
41	44-463-41	Axle					x		x
42	44-463-42	Complete Ratchet A-1					x		x
43	44-463-43	Complete Ratchet B-1					x		x
44	44-463-44	Pawl A.					x		x
45	44-463-45	Pawl Spring A.					x		x
46	*44-463	3 Speed Hub Shimano assy					x		x
47	*41-062	Control Cable					x		x
48	*49-092	Trigger Control					x		x
49	44-468	Clip Band					x		x
50	44-468-01	Cable Conductor					x		x
56	44-463-56	Pawl A					x		x
57	44-463-57	Pawl Spring A							
	*57-012-10	Rear wheel, assy hub Shimano 3 speed, without tire and tube							

CHAIN WHEELS, CHAINS, MUDGUARDS

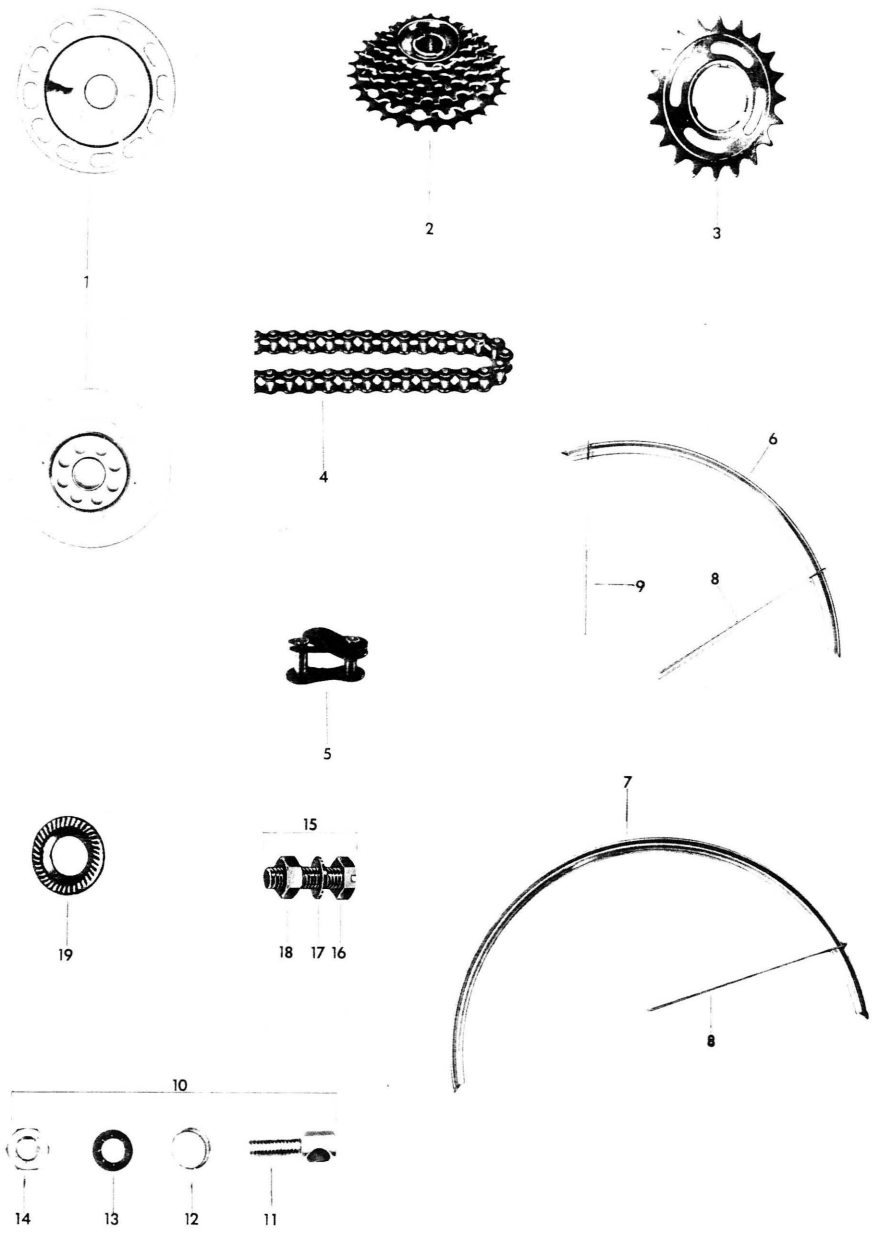

Pos	Part-No.	Description	CHAMPION 20"	MONTE CARLO 22'5"	TOUR DE L'EUROPE 22'5"	MIXTE TOURIST 22'5"	VOYAGEUR ladies' 21"	MIXTE RACER 22'5"	VOYAGEUR gent's 21"	22'5"	24" 24"	25'5" 25'5"
1	*49-054	spoke protector, plastic			x	x		x				
1	*49-051	spoke protector, chromed steel	x	x								
2	*49-056	freewheel 14-17-20-24-28	x	x	x	x		x				
3	*44-271	sprocket (T=20)					x		x			
4	*45-180	chain 1/2" x 3/32, 114 rollers	x	x	x	x		x				
4	*45-038	chain 1/2" x 1/8", 104 rollers					x		x			
5	*45-038-01	connecting roller					x		x			
5	*45-180-01	connecting roller	x	x	x			x				
6	*30-174	mudguard, front				x	x		x			
7	*30-199	mudguard, rear				x	x		x			
8	*30-090	mudguard stay front and rear L=368				x	x		x			
9	*30-176	mudguard stay L=363				x	x		x			
10	*02-049	bolt no. 6280/12 assy				x	x		x			
11	02-049-01	bolt				x	x		x			
12	02-049-04	lockring				x	x		x			
13	02-049-03	notched washer				x	x		x			
14	02-049-02	locknut				x	x		x			
15	00-116	bolt, assy				x	x		x			
16	00-116-01	bolt				x	x		x			
17	06-064	lockring				x	x		x			
18	00-116-02	locknut				x	x		x			
19	06-031	notched lockring				x	x		x			

DERAILLEUR HURET FRONT

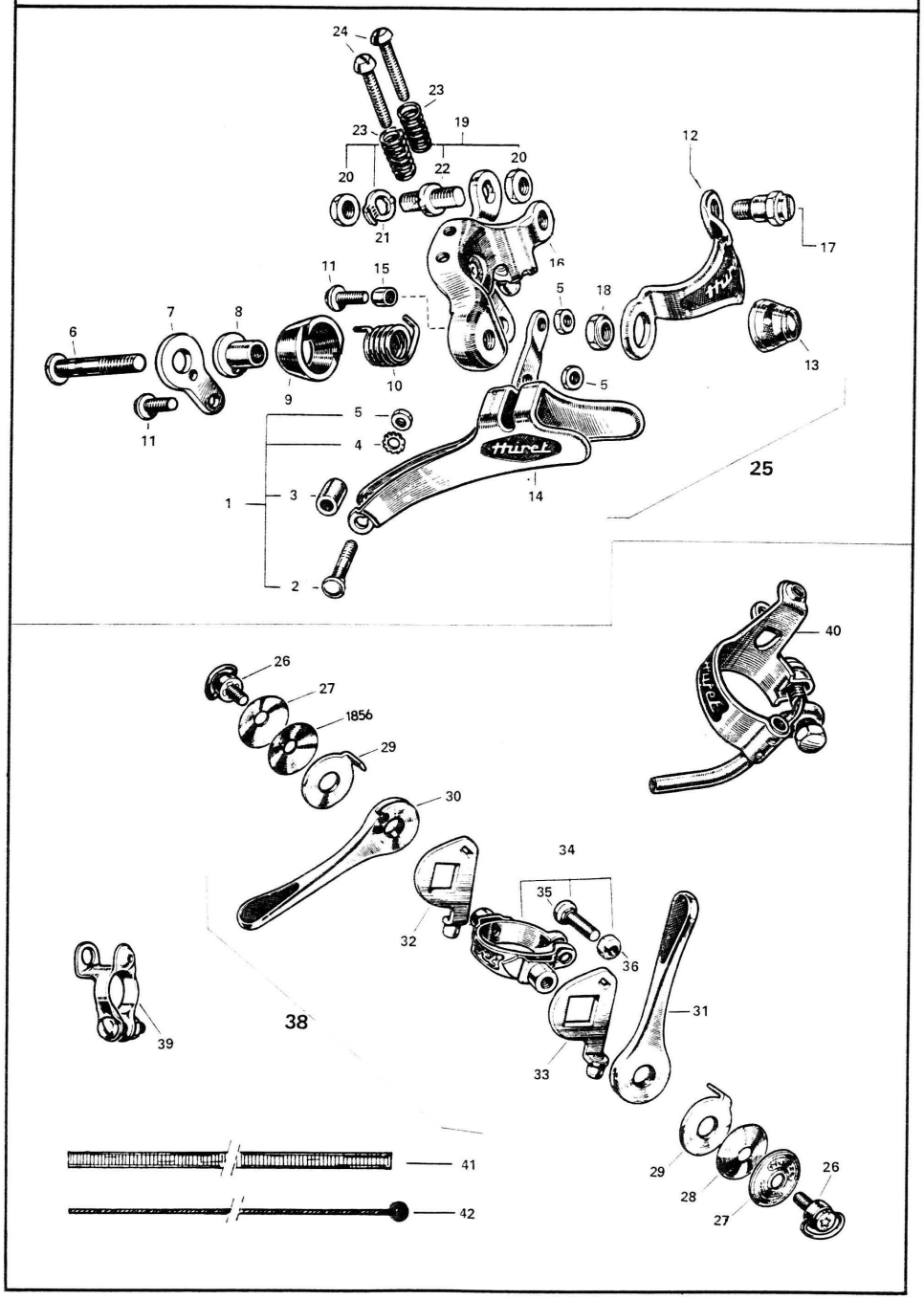

Pos	Part-No.	Description	CHAMPION 225" 20"	MONTE CARLO 225" 20"	TOUR DE L'EUROPE 225" 24"	MIXTE TOURIST 21" 24"	VOYAGEUR ladies 225"	MIXTE RACER 21"	VOYAGEUR gent's 225" 255"
1	49-066-01	cage fixing set	x	x					
2	49-066-02	bolt	x	x					
3	49-066-03	bushing	x	x					
4	49-066-04	notched washer	x	x					
5	49-066-05	nut	x	x					
6	49-066-06	bolt	x	x					
7	49-066-07	hinge plate	x	x					
8	49-066-08	spring holder	x	x					
9	49-066-09	protector cap	x	x					
10	49-066-10	spring	x	x					
11	49-066-11	screw	x	x					
12	49-066-12	clamp	x	x					
13	49-066-13	capped nut	x	x					
14	49-066-14	chain conductor	x	x					
15	49-066-15	bushing	x	x					
16	49-066-16	front derailleur casing	x	x					
17	49-066-17	clamp bolt	x	x					
18	49-066-18	nut	x	x					
19	49-066-19	cable anchor set	x	x					
20	49-067-17	cable anchor nut	x	x					
21	49-066-20	eared anchor washer	x	x					
22	49-066-21	cable anchor bolt	x	x					
23	49-066-22	adjusting spring	x	x					
24	49-066-23	adjusting screw	x	x					
25	*49-066	front derailleur Huret, assy	x	x					
26	49-066-25	wing screw	x	x					
27	49-066-26	washer	x	x					
28	49-066-27	spacer spring	x	x					
29	49-066-28	cared lock washer	x	x					
30	49-066-29	lever arm (L)	x	x					
31	49-066-30	lever arm (R)	x	x					
32	49-066-31	mounting plate (L)	x	x					
33	49-066-32	mounting plate (R)	x	x					
34	49-066-33	mounting clip assy	x	x					
35	49-066-34	bolt	x	x					
36	49-066-35	nut	x	x					
38	*49-066-37	control lever mechanism, assy	x	x					
39	49-066-38	cable anchor clip	x	x					
40	49-066-39	cable conductor	x	x					
41	*49-066-40	cable housing front, 175 mm	x	x					
41	*49-066-41	cable housing rear, 200 mm	x	x					
42	*49-066-42	cable front, 650 mm	x	x					
42	*49-066-43	cable rear, 1180 mm	x	x					

DERAILLEUR HURET REAR

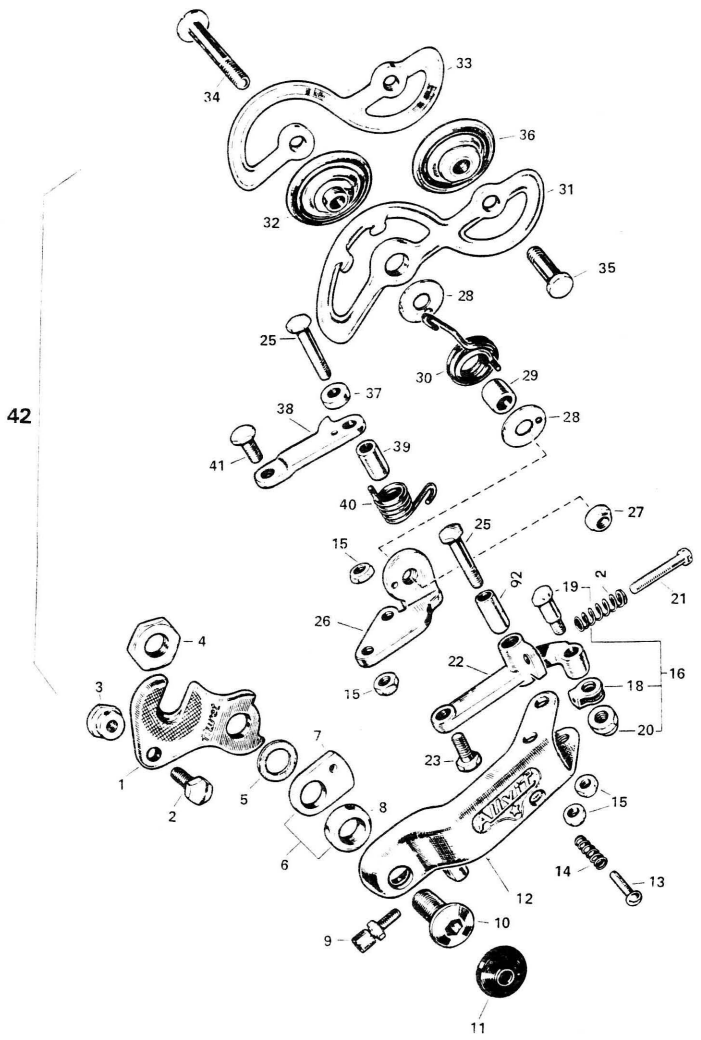

Pos	Part-No.	Description	CHAMPION	MONTE CARLO	TOUR DE L'EUROPE	MIXTE TOURIST	VOYAGEUR ladies'	MIXTE RACER	VOYAGEUR gent's
				20"	225"	225"	225"	21"	225"
					24"	24"			
					255"	255"			
1	49-067-01	mounting plate	x	x					
2	49-067-02	mounting bolt	x	x					
3	49-067-03	mounting nut	x	x					
4	49-067-04	locknut	x	x					
5	49-067-05	nylon washer	x	x					
6	49-067-06	stop plate with bushing	x	x					
7	49-067-07	stop plate	x	x					
8	49-067-08	bushing	x	x					
9	49-067-09	adjustable barrel	x	x					
10	49-067-10	pivot bolt	x	x					
11	49-067-11	cap	x	x					
12	49-067-12	changer body	x	x					
13	49-067-13	adjustable screw	x	x					
14	49-067-14	spring	x	x					
15	49-067-15	nut	x	x					
16	49-067-16	cable anchor set	x	x					
17	49-067-17	cable anchor nut	x	x					
18	49-067-18	double washer	x	x					
19	49-067-19	anchor bolt	x	x					
20	49-067-20	spring	x	x					
21	49-067-21	adjusting screw	x	x					
22	49-067-22	conducting shaft	x	x					
23	49-067-23	bolt	x	x					
24	49-067-24	bushing	x	x					
25	49-067-25	bolt	x	x					
26	49-067-26	excenter	x	x					
27	49-067-27	nut	x	x					
28	49-067-28	washer	x	x					
29	49-067-29	bushing	x	x					
30	49-067-30	spring	x	x					
31	49-067-31	outside cage plate	x	x					
32	49-067-32	jockey roller	x	x					
33	49-067-33	inside cage plate	x	x					
34	49-067-34	roller bolt	x	x					
35	49-067-35	roller bolt	x	x					
36	49-067-36	tension roller	x	x					
37	49-067-37	bushing	x	x					
38	49-067-38	stop plate	x	x					
39	49-067-39	bushing	x	x					
40	49-067-40	spring	x	x					
41	49-067-41	bolt	x	x					
42	*49-067-42	rear derailleur Huret, assy	x	x					

DERAILLEUR SHIMANO FRONT

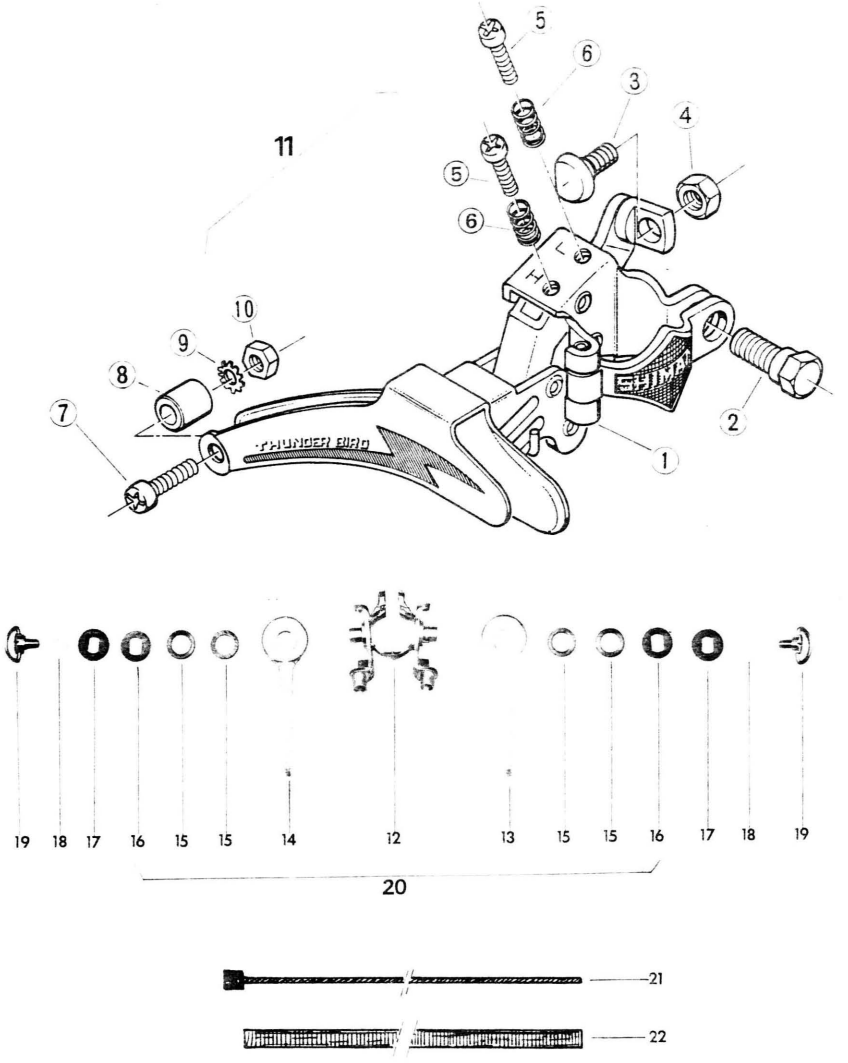

Pos	Part-No.	Description	CHAMPION	MONTE CARLO	TOUR DE L'EUROPE	MIXTE TOURIST	VOYAGEUR ladies'	MIXTE RACER	VOYAGEUR gent's
			20"	225"	225" 24"	21"	225"	21"	225"
1	49-084-01	front mechanism. assy				x		x	
2	49-084-02	clamp bolt				x		x	
3	49-084-03	cable anchor bolt				x		x	
4	49-084-04	cable anchor nut				x		x	
5	49-084-05	adjusting bolt				x		x	
6	49-084-06	adjusting spring				x		x	
7	49-084-07	bolt				x		x	
8	49-084-08	bushing				x		x	
9	49-084-09	notched washer				x		x	
10	49-084-10	nut				x		x	
11	*49-084	front derailleur Shimano, assy				x		x	
12	49-084-12	double clamp				x		x	
13	49-084-13	lever (R)				x		x	
14	49-084-14	lever (L)				x		x	
15	49-084-15	spacer ring				x		x	
16	49-084-16	washer				x		x	
17	49-084-17	nameplate cover				x		x	
18	49-084-18	ondulated washer				x		x	
19	49-084-19	screw				x		x	
20	*49-084-20	control lever mechanism, assy				x		x	
21	*49-084-21	cable housing front, 1040 mm				x		x	
21	*49-084-22	cable housing rear, 1500 mm				x		x	
22	*49-084-23	cable front, 1130 mm				x		x	
22	*49-084-24	cable rear, 1630 mm				x		x	

DERAILLEUR SHIMANO REAR

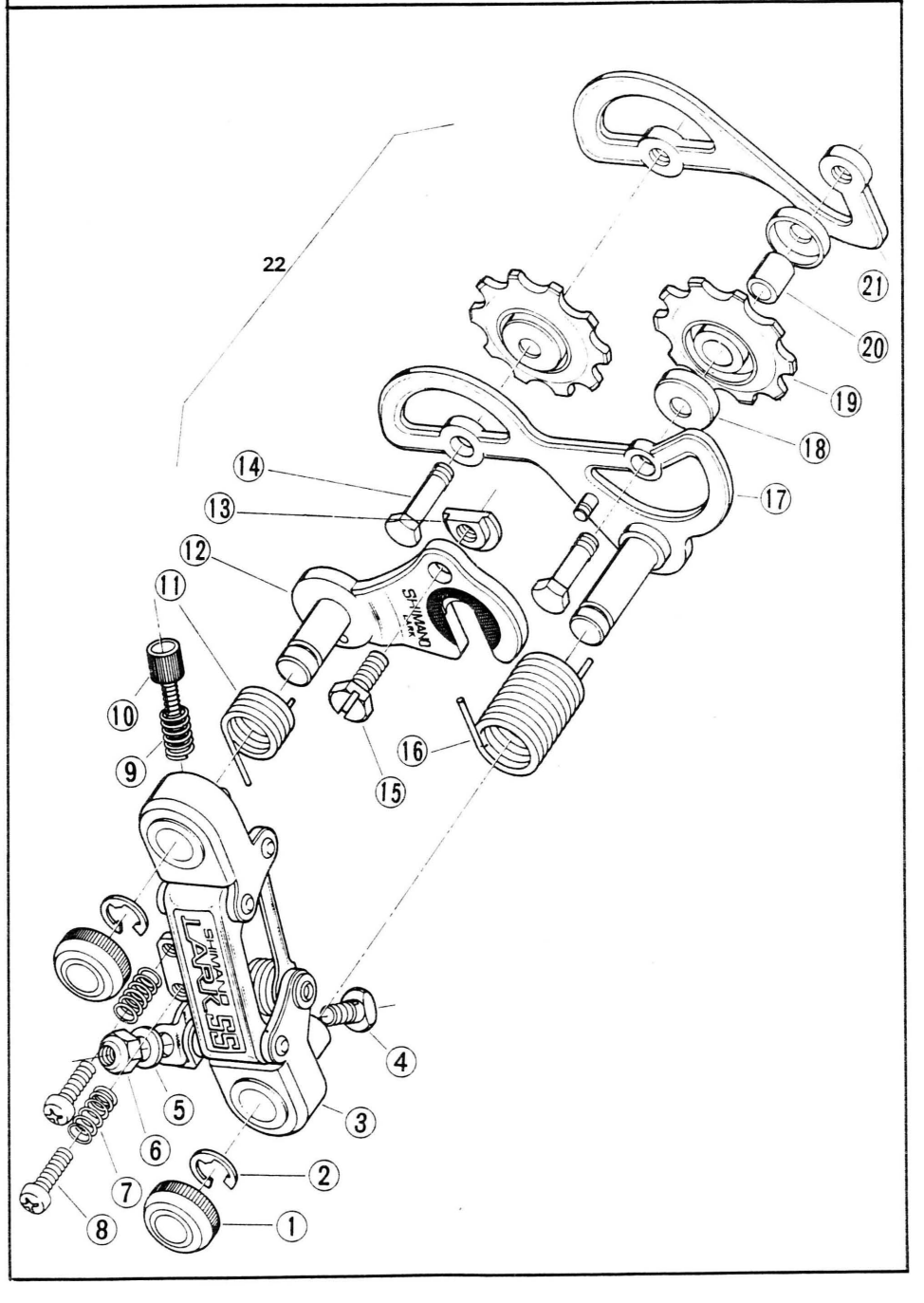

Pos	Part-No.	Description	CHAMPION	MONTE CARLO	TOUR DE L'EUROPE	MIXTE TOURIST	VOYAGEUR ladies'	MIXTE RACER	VOYAGEUR gent's
				20"	225"	21"	225"	21"	225"
				225"	24"	24"			
				225"	255"	255"			
1	49-085-01	cap				x		x	
2	49-085-02	stop ring				x		x	
3	49-085-03	mechanism. assy (S.S. type)				x		x	
4	49-085-04	cable fixing bolt				x		x	
5	49-085-05	cable fixing washer				x		x	
6	49-085-06	cable fixing nut				x		x	
7	49-085-07	adjusting spring				x		x	
8	49-085-08	adjusting screw				x		x	
9	49-085-09	cable adjusting spring				x		x	
10	49-085-10	cable adjusting barrel				x		x	
11	49-085-11	B. Tension spring				x		x	
12	49-085-12	adapter with mounting shaft				x		x	
13	49-085-13	adapter nut				x		x	
14	49-085-14	pulley bolt				x		x	
15	49-085-15	adapter screw (M5 x 10)				x		x	
16	49-085-16	P-Tension Spring				x		x	
17	49-085-17	inner cage plate W/Bolt				x		x	
18	49-085-18	pulley cap				x		x	
19	49-085-19	pulley				x		x	
20	49-085-20	pulley bushing				x		x	
21	49-085-21	outer cage plate				x		x	
22	*49-085-22	rear derailleur Shimano, assy				x		x	

DERAILLEUR SIMPLEX FRONT

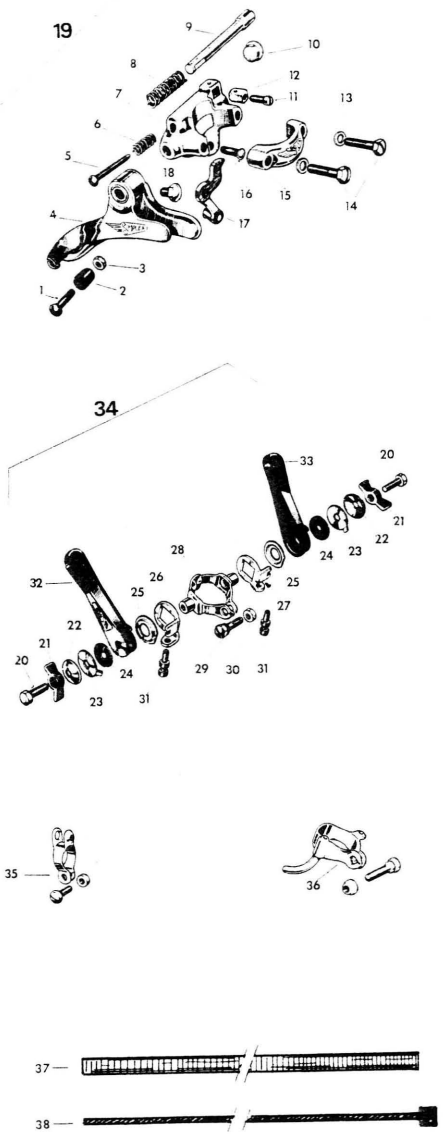

Pos	Part-No.	Description	CHAMPION	MONTE CARLO	TOUR DE L'EUROPE	MIXTE TOURIST	VOYAGEUR ladies'	MIXTE RACER	VOYAGEUR gent's
			20"	22.5"	22.5"	21"	22.5"	21"	22.5"
				24"	24"				
				25.5"	25.5"				
1	49-060-01	adjusting		x	x				
2	49-060-02	bushing		x	x				
3	49-060-03	nut		x	x				
4	49-060-04	chain conductor		x	x				
5	49-060-05	adjustable bolt		x	x				
6	49-060-06	spring		x	x				
7	49-060-07	front derailleur casing		x	x				
8	49-060-08	spring		x	x				
9	49-060-09	threaded pole		x	x				
10	49-060-10	cap		x	x				
11	49-060-11	cable anchor bolt		x	x				
12	49-060-12	cable anchor casing		x	x				
13	49-060-13	washer		x	x				
14	49-060-14	clamp bolt		x	x				
15	49-060-15	clamp		x	x				
16	49-060-16	rivet		x	x				
17	49-060-17	mounting plate		x	x				
18	49-060-18	adjustable screw		x	x				
19	*49-060-19	front derailleur Simplex, assy		x	x				
20	49-060-20	adjustable bolt		x	x				
21	49-060-21	lock wing		x	x				
22	49-060-22	washer		x	x				
23	49-060-23	eared lock washer		x	x				
24	49-060-24	spacer spring		x	x				
25	49-060-25	flatside washer		x	x				
26	49-060-26	mounting plate (R)		x	x				
27	49-060-27	mounting plate (L)		x	x				
28	49-060-28	mounting clip		x	x				
29	49-060-29	bolt		x	x				
30	49-060-30	nut		x	x				
31	49-060-31	eared slot nipple		x	x				
32	49-060-32	lever arm (R)		x	x				
33	49-060-33	lever arm (L)		x	x				
34	*49-060-34	control lever mechanism, assy (incl. cables)		x	x				
35	49-060-35	cable anchor clip		x	x				
36	49-060-36	cable conductor		x	x				
37	*49-060-37	cable housing front. 175 mm		x	x				
37	*49-060-38	cable housing rear, 200 mm		x	x				
38	*49-60-39	cable front, 650 mm		x	x				
38	*49-60-40	cable rear, 1180 mm		x	x				

DERAILLEUR SIMPLEX REAR

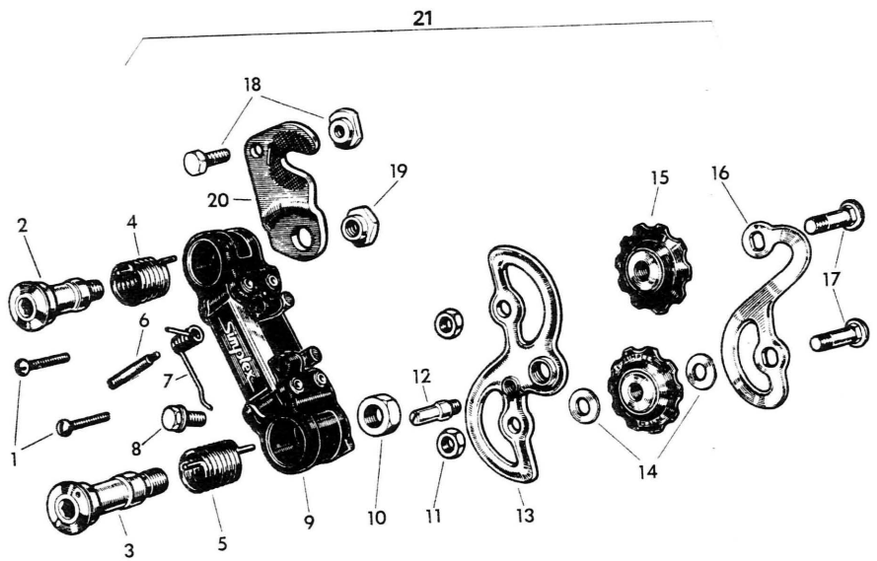

Pos	Part-No.	Description	CHAMPION	MONTE CARLO	TOUR DE L'EUROPE	MIXTE TOURIST	VOYAGEUR ladies	MIXTE RACER	VOYAGEUR gent's
					22,5"	21"	22,5"	21"	22,5"
				24"	24"				
				25,5"	25,5"				
			20"	22,5"	22,5"				
1	49-061-01	adjusting screw		x	x				
2	49-061-02	pivot bolt		x	x				
3	49-061-03	pivot bolt		x	x				
4	49-061-04	spring		x	x				
5	49-061-05	spring		x	x				
6	49-061-06	threaded pole		x	x				
7	49-061-07	spring		x	x				
8	49-061-08	bolt with washer		x	x				
9	49-061-09	changer body		x	x				
10	49-061-10	nut		x	x				
11	49-061-11	nut		x	x				
12	49-061-12	threaded pole		x	x				
13	49-061-13	outside cage plate		x	x				
14	49-061-14	washer		x	x				
15	49-061-15	roller		x	x				
16	49-061-16	inside cage plate		x	x				
17	49-061-17	roller bolt		x	x				
18	49-061-18	mounting bolt with flatside nut		x	x				
19	49-061-19	nut		x	x				
20	49-061-20	mounting plate		x	x				
21	*49-061-21	rear derailleur Simplex, assy		x	x				

HANDLEBARS

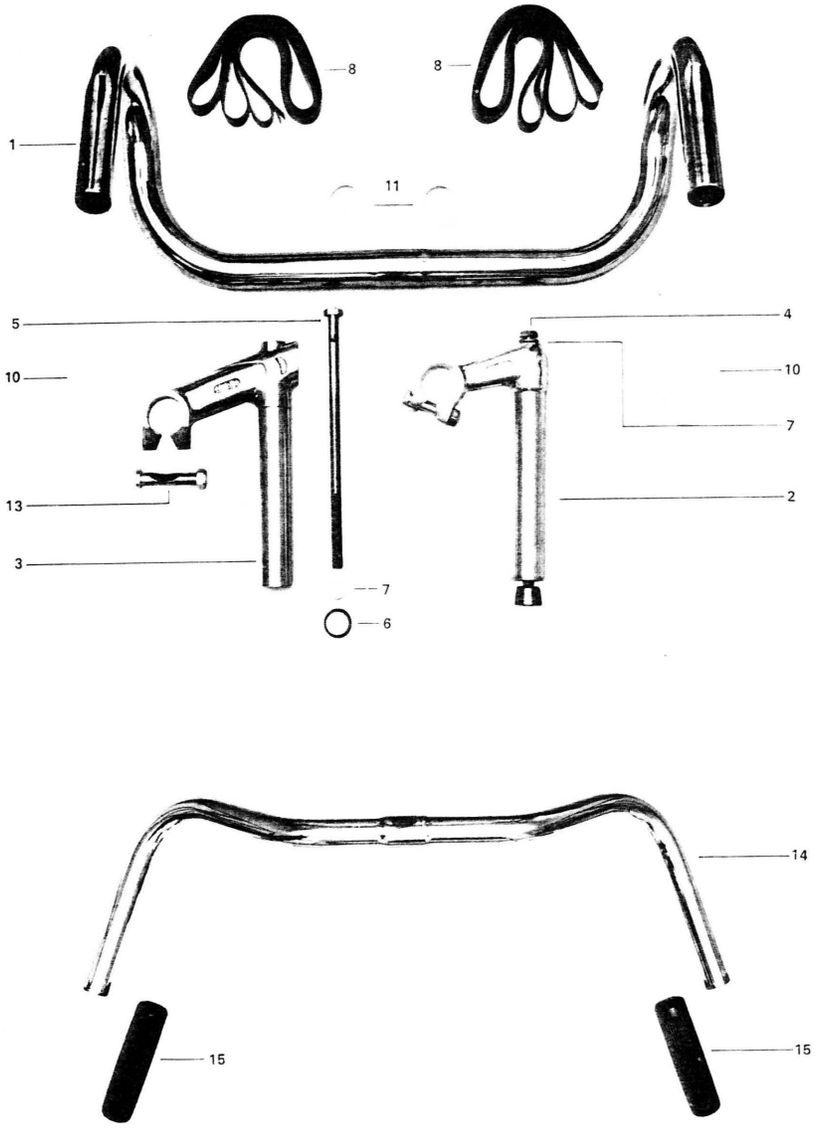

Pos	Part-No.	Description	CHAMPION 20" 22.5"	MONTE CARLO 20" 22.5"	TOUR DE L'EUROPE 24" 22.5"	MIXTE TOURIST 24" 22.5"	VOYAGEUR ladies' 21" 22.5"	MIXTE RACER 21" 22.5"	VOYAGEUR gent's 22.5" 25.5" 25.5"
1	12-280	handlebar bent, alloy			x				
1	12-279	handlebar bent, chromed steel	x	x				x	
2	12-274	stem ATAX PS 72	x	x				x	
2	12-277	stem ATAX PR 66	x	x		x	x	x	x
3	12-276	stem, ATAX PS 78			x				
4	12-274-01	expander bolt	x	x				x	
4	12-277-01	expander bolt	x	x		x	x	x	x
5	12-276-01	expander bolt			x				
6	12-274-02	wedge nut	x	x	x	x	x	x	x
7	12-274-03	washer	x	x	x	x	x	x	x
8	12-279-01	tape	x	x	x			x	
10	12-280-03	dust cap	x	x				x	
11	12-280-01	dust rings			x				
	*12-285	handlebar, assy (Altenburger brake levers), steel	x	x					
	*12-286	handlebar, assy (Weinman brake levers), steel		x					
	*12-287	handlebar, assy (Angenieux brake levers) steel		x				x	
	*12-288	handlebar, assy (Altenburger brake levers) alloy			x				
	*12-289	handlebar, assy (Weinmann brake levers) alloy			x				
13	12-274-04	binderbolt	x	x	x	x	x	x	x
14	*12-117	handlebar, NSU, chromed steel with stem				x	x		x
15	*41-243	hand grips No. 544, pair				x	x		x

BRAKES

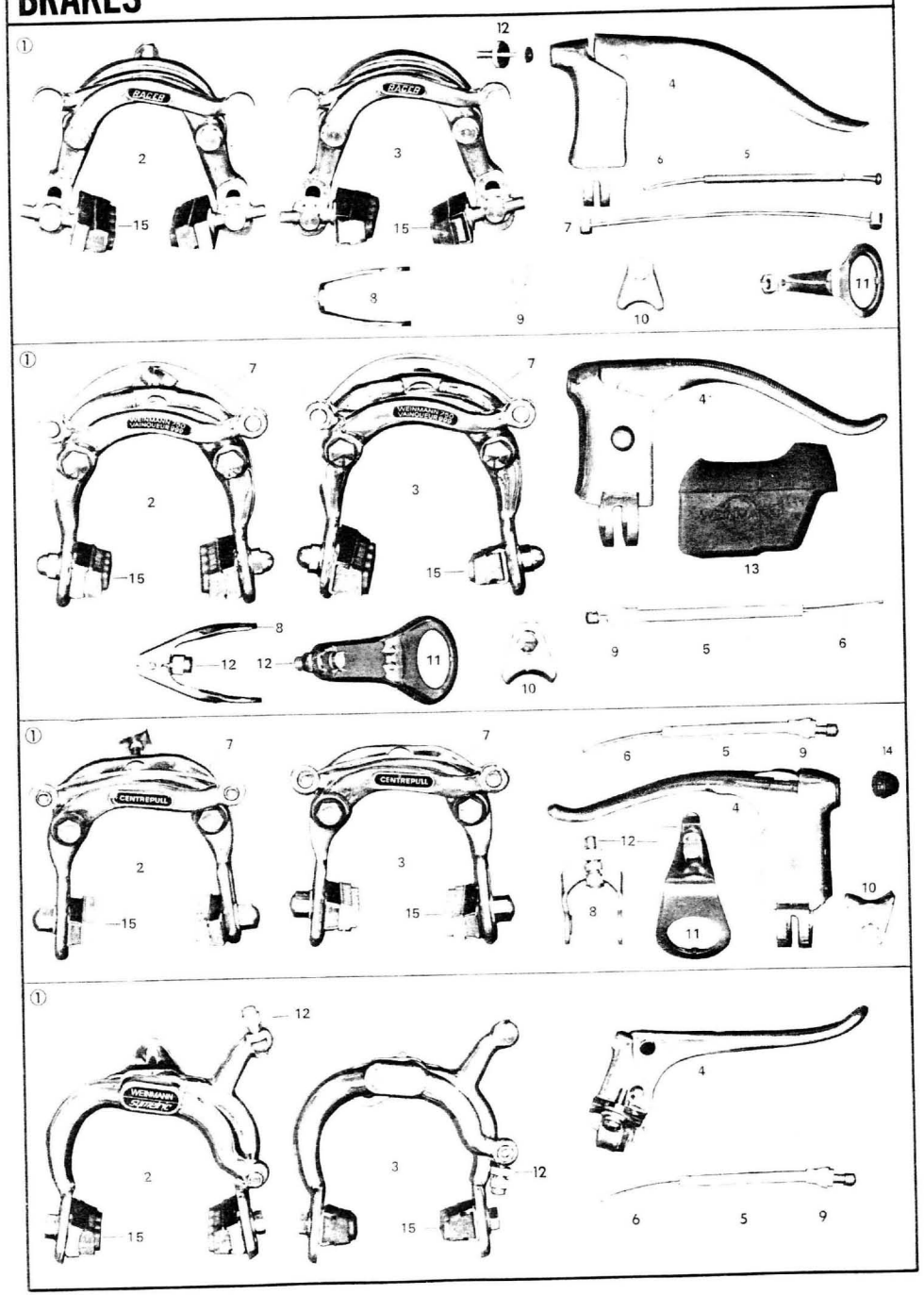

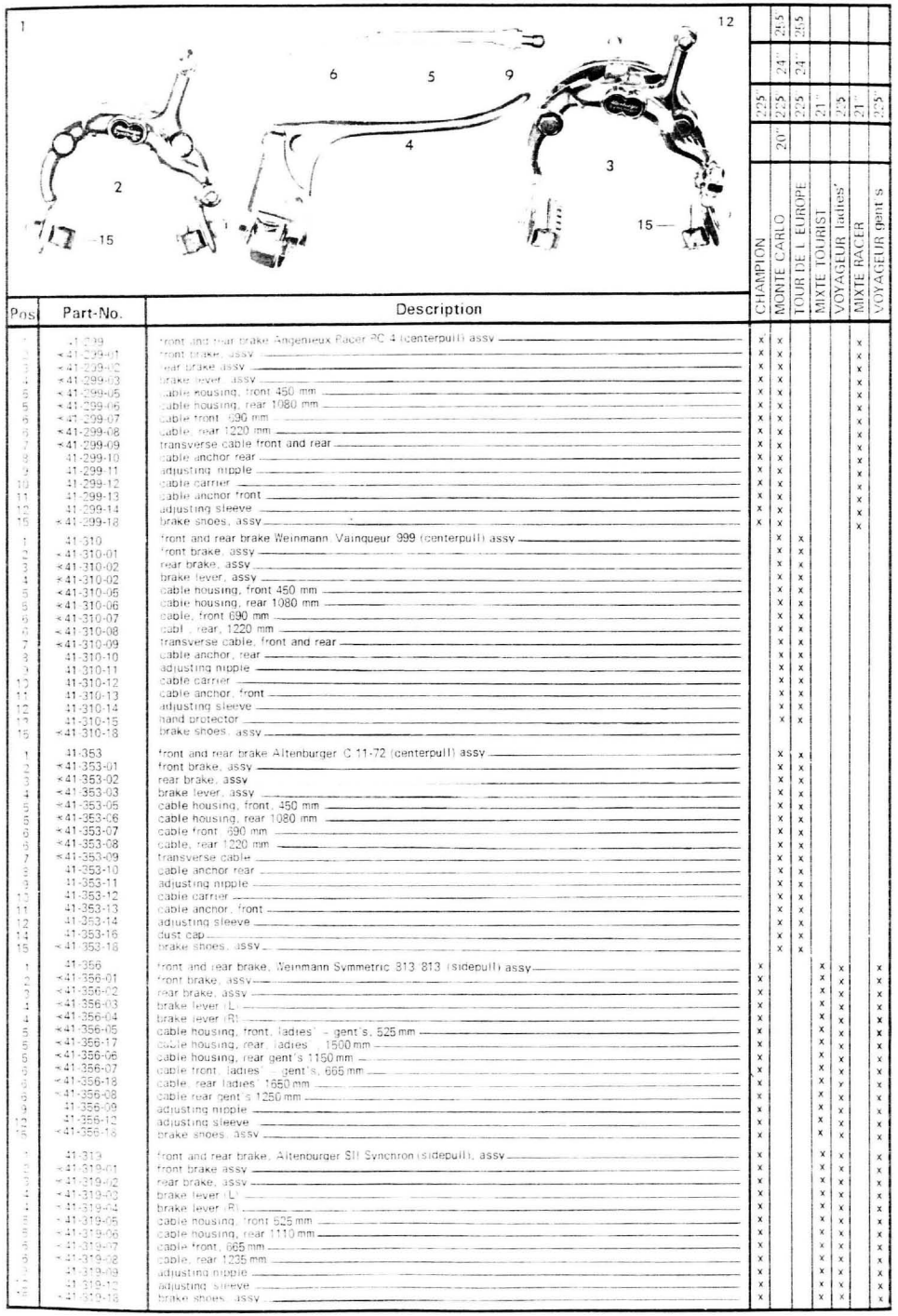

			CHAMPION	MONTE CARLO	TOUR DE L EUROPE	MIXTE TOURIST	VOYAGEUR ladies'	MIXTE RACER	VOYAGEUR gent s
				20"	22'5	24"	26'5		
				22'5	22'5	24"	26'5		
				22'5	22'5	21"	22'5	21	22'5
Pos	Part-No.	Description							
1	41-299	front and rear brake Angenieux Racer RC 4 (centerpull) assy	x	x				x	
2	*41-299-01	front brake, assy	x	x				x	
3	*41-299-02	rear brake, assy	x	x				x	
4	*41-299-03	brake lever, assy	x	x				x	
5	*41-299-05	cable housing, front 450 mm	x	x				x	
5	*41-299-06	cable housing, rear 1080 mm	x	x				x	
6	*41-299-07	cable front 690 mm	x	x				x	
6	*41-299-08	cable, rear 1220 mm	x	x				x	
7	*41-299-09	transverse cable front and rear	x	x				x	
8	41-299-10	cable anchor rear	x	x				x	
9	41-299-11	adjusting nipple	x	x				x	
10	41-299-12	cable carrier	x	x				x	
11	41-299-13	cable anchor front	x	x				x	
12	41-299-14	adjusting sleeve	x	x				x	
15	*41-299-18	brake shoes, assy	x	x				x	
1	41-310	front and rear brake Weinmann Vainqueur 999 (centerpull) assy		x	x				
2	*41-310-01	front brake, assy		x	x				
3	*41-310-02	rear brake, assy		x	x				
4	*41-310-02	brake lever, assy		x	x				
5	*41-310-05	cable housing, front 450 mm		x	x				
5	*41-310-06	cable housing, rear 1080 mm		x	x				
6	*41-310-07	cable, front 690 mm		x	x				
6	*41-310-08	cable, rear, 1220 mm		x	x				
7	*41-310-09	transverse cable, front and rear		x	x				
8	41-310-10	cable anchor, rear		x	x				
9	41-310-11	adjusting nipple		x	x				
10	41-310-12	cable carrier		x	x				
11	41-310-13	cable anchor, front		x	x				
12	41-310-14	adjusting sleeve		x	x				
13	41-310-15	hand protector		x	x				
15	*41-310-18	brake shoes, assy							
1	41-353	front and rear brake Altenburger C 11-72 (centerpull) assy		x	x				
2	*41-353-01	front brake, assy		x	x				
3	*41-353-02	rear brake, assy		x	x				
4	*41-353-03	brake lever, assy		x	x				
5	*41-353-05	cable housing, front, 450 mm		x	x				
5	*41-353-06	cable housing, rear 1080 mm		x	x				
6	*41-353-07	cable front 690 mm		x	x				
6	*41-353-08	cable, rear 1220 mm		x	x				
7	*41-353-09	transverse cable		x	x				
8	41-353-10	cable anchor rear		x	x				
9	41-353-11	adjusting nipple		x	x				
10	41-353-12	cable carrier		x	x				
11	41-353-13	cable anchor, front		x	x				
12	41-353-14	adjusting sleeve		x	x				
14	41-353-16	dust cap		x	x				
15	*41-353-18	brake shoes, assy		x	x				
1	41-356	front and rear brake, Weinmann Symmetric 813/813 (sidepull) assy	x			x	x		x
2	*41-356-01	front brake, assy	x			x	x		x
3	*41-356-02	rear brake, assy	x			x	x		x
4	*41-356-03	brake lever (L)	x			x	x		x
4	*41-356-04	brake lever (R)	x			x	x		x
5	*41-356-05	cable housing, front, ladies' - gent's, 525 mm	x			x	x		x
5	*41-356-17	cable housing, rear ladies' 1500 mm	x			x	x		x
5	*41-356-06	cable housing, rear gent's 1150 mm	x			x	x		x
6	*41-356-07	cable front ladies' - gent's, 665 mm	x			x	x		x
6	*41-356-18	cable rear ladies' 1650 mm	x			x	x		x
6	*41-356-08	cable rear gent's 1250 mm	x			x	x		x
9	41-356-09	adjusting nipple	x			x	x		x
12	41-356-12	adjusting sleeve	x			x	x		x
15	*41-356-18	brake shoes, assy	x			x	x		x
1	41-319	front and rear brake, Altenburger SII Synchron (sidepull), assy	x			x	x		x
2	*41-319-01	front brake assy	x			x	x		x
3	*41-319-02	rear brake, assy	x			x	x		x
4	*41-319-03	brake lever (L)	x			x	x		x
4	*41-319-04	brake lever (R)	x			x	x		x
5	*41-319-05	cable housing, front 525 mm	x			x	x		x
5	*41-319-06	cable housing, rear 1110 mm	x			x	x		x
6	*41-319-07	cable front, 665 mm	x			x	x		x
6	*41-319-08	cable, rear 1235 mm	x			x	x		x
9	41-319-09	adjusting nipple	x			x	x		x
12	41-319-12	adjusting sleeve	x			x	x		x
15	*41-319-18	brake shoes, assy	x			x	x		x

CABLE CLIPS

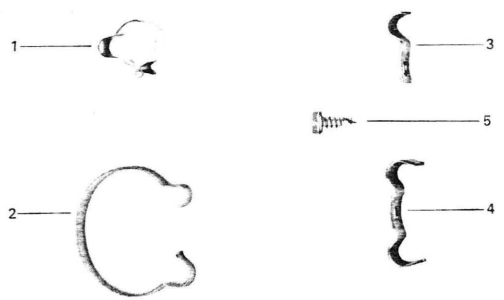

Pos	Part-No.	Description	CHAMPION	MONTE CARLO	TOUR DE L'EUROPE	MIXTE TOURIST	VOYAGEUR ladies'	MIXTE RACER	VOYAGEUR gent's
			225"	225"	225"	21"	225"	21"	225"
				20"					
				24"	24"				
				25,5"	25,5"				
1	*44-462	brake cable clip, top tube				x			
2	*44-461	brake cable clip, top tube	x	x	x		x		x
3	*44-389	cable clip, bottom tube					x		x
4	*44-390	derailleur cable clip, bottom tube				x		x	
5	*07-021	self-drilling screw				x	x	x	

SEATS, TOOLKIT, HEAD PLATE, KICKSTAND

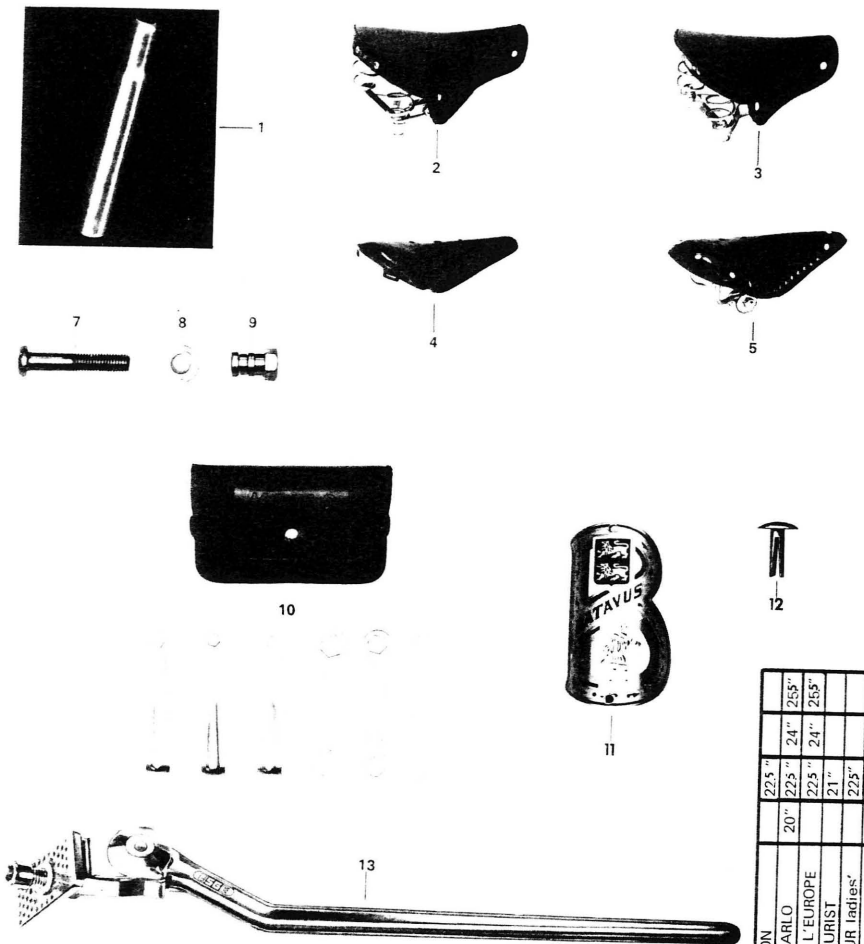

Pos	Part-No.	Description	CHAMPION	MONTE CARLO	TOUR DE L'EUROPE	MIXTE TOURIST	VOYAGEUR ladies'	MIXTE RACER	VOYAGEUR gent's
			225"	225"	225"	21"	225"	21"	225"
				20"					
				24"	24"				
				25,5"	25,5"				
1	*44-278	seat stem				x	x	x	
1	*44-277	seat stem	x	x	x				x
2	*54-054	seat No. 141 Lepper				x	x		
3	*54-069	seat No. 222 Galet						x	
4	*54-076	seat, Grand Prix	x	x					
5	*54-077	seat, leather covered, Per John							
7	00-089	seat bolt	x	x	x	x	x	x	x
8	02-067	seat bolt nut No. 4328	x	x	x	x	x	x	x
9	06-052	washer	x	x	x	x	x	x	x
10	*86-010	toolkit MAFAC, assy			x				
11	43-046	ornamental headplate	x	x	x	x	x	x	x
12	05-007	rivet 1.5 x 5 BK	x	x	x	x	x	x	x
13	*11-152	kickstand, assy		x	x	x	x	x	x

DECALS

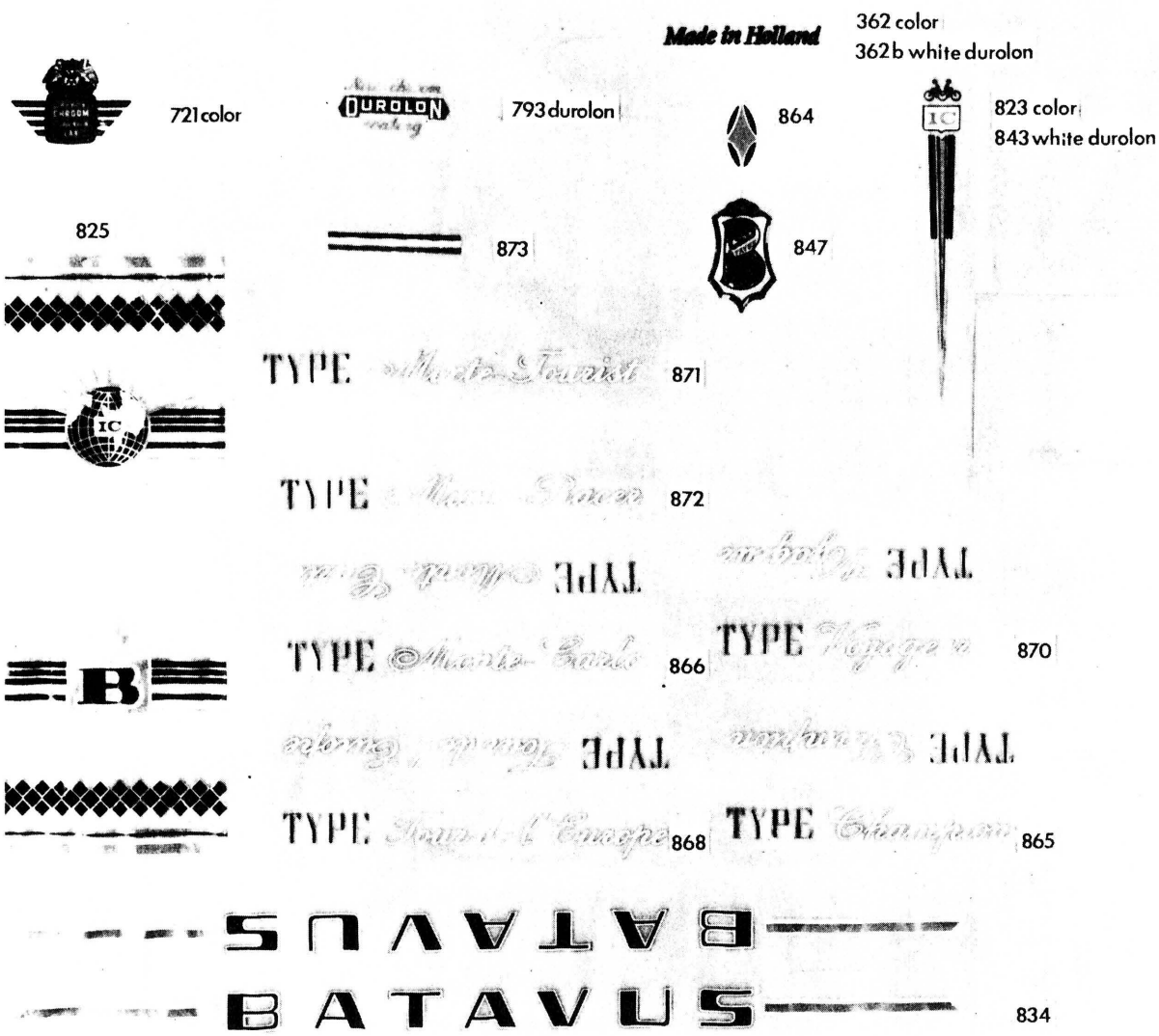

model	coating	seat tube	seat tube	down tube	top tube	fork	mudquard	seat stay
Champion	white	362 B	825	834	865	843		864
Monte Carlo	white	362 B	825	834	866	843,873		864
	color	362	825	834	866	823,873		864
Tour de L'europe	white	362 B	825	834	868	843,873		864
	color	362	825	834	868	823,873		864
Mixte Tourist	white	362 B	825	834	871	843	847	864
	color	362	825	834	871	823	847	864
Voyageur	white	362 B	825	834	870	843	847	864
ladies' and gent's	color	362	825	834	870	823	847	864
Mixte Racer	white	362 B	825	834	872	843		864
	color	362	825	834	872	823		864
All models	Durolon	793						
	Taurus	721						

BATAVUS N.V.

INDUSTRIEWEG 4, HEERENVEEN
HOLLAND

PRINTED IN THE NETHERLANDS BY VAN DER VEGT & OVERDIEP HEERENVEEN Bat. 664